numatics®

Mark 15 & PA 15 Series

Direct Solenoid or Air Pilot Valves

www.numatics.com

EMERSON
Industrial Automation

Table of Contents

Mark 15 & PA 15 Series

Technical and Operating Data	3
How to Order	4-7
Valve on Individual Base	8-9
Manifold Assembly	10-11
Sandwich Pressure Regulators	12
Sandwich Pressure Regulator Dimensions	13
Check Assembly Kits	13
Regulator Service Kit	14
Valve, Speed Control, and Regulator Plug-in Assembly-Mark 15	14
End Plate Kits	15
Blank Station Plate Kit	15
Blocking Disc Kit	15
Adaptor Kits with End Plates	15
Speed Control Kits	16
Base Assembly Kits	17
Flexiblok Manifold Kits	18
Service Kits and Parts	19-20
Solenoid Capsule Assemblies	21
Plug Assemblies	21

5 Ported, 2 and 3 position, 4-way, Spool & Sleeve

Cv: 1.5

- Direct solenoid or air pilot actuated
- Plug-in solenoid with indicator light
- Unlubricated or lubricated service
- Integral speed control available
- Integral regulators available
- NEMA 4
- Body to base plug-in

double solenoid
3 Position 4-Way (5/3),
pressure center

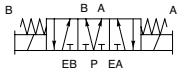

double air pilot
3 Position 4-Way (5/3),
pressure center

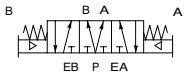

single solenoid
2 position 4-way

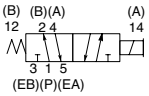

double solenoid
2 position 4-way

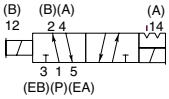

double solenoid
3 position 4-way
open center

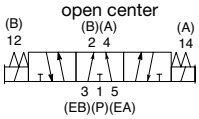

double solenoid
3 position 4-way
closed center

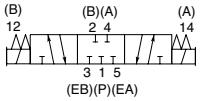

single air pilot
2 position 4-way

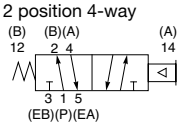

double air pilot
2 position 4-way
with spring offset

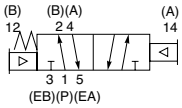

double air pilot
2 position 4-way

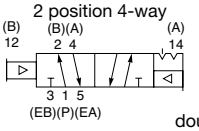

double air pilot
3 position 4-way
open center

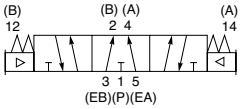

double air pilot
3 position 4-way
closed center

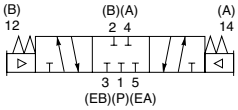

Technical Data

Valve Data		English		Metric Mark 15 Only	
Cv		1/4 NPTF = 1.4	3/8 NTPF = 1.5	1/4 G Tap = 1.4	3/8 G Tap = 1.5
Flow Capacity		65 SCFM	69 SCFM	1379 Nl/m	1477 Nl/m
		Upstream pressure to atmosphere @80 PSIG		@ 6 bar upstream/5 bar downstream	
Operating Pressure Range		28” Hg. Vacuum to 150 PSIG		Vacuum to 10 bar	
Temperature Range (Ambient)		-10°F to +115°F		-23°C to +46°C	
Pilot Pressure Range (PA15)	2-Position, Spring Return 2-Position, Detented 3-Position	20 to 125 PSIG 15 to 125 PSIG 20 to 125 PSIG			

Operating Data

All Solenoids Are Continuous Duty Rated		12 VDC	24 VDC	24 VAC 50 Hz	24 VAC 60 Hz	115 VAC 50 Hz	120 VAC 60 Hz	230 VAC 50 Hz	240 VAC 60 Hz
Power (Watts)		6.0	6.0	N/A	N/A	N/A	N/A	N/A	N/A
Holding Current (Amps.)		0.500	0.250	0.590	0.420	0.110	0.090	0.070	0.050
Inrush Current (Amps.)		N/A	N/A	2.850	2.530	0.630	0.580	0.310	0.290
Energize in seconds	2-Position, Single, Spring Return	0.038	0.034	0.010	0.010	0.010	0.010	0.010	0.010
	2-Position, Double, Detented	0.035	0.035	0.010	0.010	0.010	0.010	0.010	0.010
	3-Position, Spring Centered	0.040	0.040	0.010	0.010	0.010	0.010	0.010	0.010
De-energize in seconds	2-Position, Single, Spring Return	0.016	0.011	0.015	0.015	0.015	0.015	0.015	0.015
	2-Position, Double, Detented	N/A	N/A	N/A	N/A	N/A	N/A	N/A	N/A
	3-Position, Spring Centered	0.010	0.010	0.012	0.012	0.012	0.012	0.012	0.012

Information subject to change without notice. For ordering information or regarding your local sales office visit www.numatics.com.

numatics

How to Order

Valves

153 SA 4 15 K 0 000 30

Valve Series & Port Size
152* = 1/4
153 = 3/8
*Valve unit only.

Valve Type
SA = Single Solenoid, Spring Return W/Flush Non-locking Override
SS = Double Direct Solenoid w/Flush Non-locking Override (Standard)
JA = Single Air Pilot, Spring Return w/Flush Non-Locking Override (Std.)
JJ = Double Air Pilot w/Flush Non-Locking Override
JK = Double Air Pilot, Spring Return w/Flush Non-Locking Override
PA = Single Air Pilot, Spring Return w/out Override
PP = Double Air Pilot w/out Override

Function
4 = 2 Position, 4-Way
5 = 3 Position, 4-Way Open Center
6 = 3 Position, 4-Way Closed Center
7 = 3 Position 4-Way (5/3), Pressure Center
0 = Manifold Block w/o Valve
P = Manifold Block, w/Blank Station Plate

Mounting
00 = Valve Unit, w/o Mounting
01 = Valve Unit, Speed Control, w/o Mounting
02 = Valve Unit w/ Long Screws for Speed Control
15 = Manifold Block, Side and Bottom Cylinder Ports
16 = Manifold Block, Side and Bottom Cylinder Ports, Auxiliary Inlet
1B = Manifold Block, Side and Bottom Cylinder Ports, Alternate Outlet
18 = Manifold Block, Side and Bottom Cylinder Ports, Alternate Outlet & Auxiliary Inlet
25 = Manifold Block, Side and Bottom Cylinder Ports, Speed Control
3A = Plug-in Base, Individual Exhaust, Side Cylinder Ports, (Mark 15 only)
3B = Plug-in Base, Individual Exhaust, Side and Bottom Cylinder Ports, (Mark 15 only)
3C = Plug-in Base, Individual Exhaust, Side Cylinder Ports, Speed Control (Mark 15 only)
3D = Plug-in Base, Individual Exhaust, Side and Bottom Cylinder Ports, Speed Control (Mark 15 only)
31 = Plug-in Base, Common Exhaust, Side Cylinder Ports (Mark 15 only)
32 = Plug-in Base, Common Exhaust, Side and Bottom Cylinder Ports (Mark 15 only)
35 = Plug-in Base, Common Exhaust, Side Cylinder Ports, Speed Control (Mark 15 only)
36 = Plug-in Base, Common Exhaust, Side and Bottom Cylinder Ports, Speed Control (Mark 15 only)
41 = Base, Individual Exhaust, Side Cylinder Ports (PA15 only)
43 = Base, Individual Exhaust, Side and Bottom Cylinder Ports (PA15 only)
44 = Base, Common Exhaust, Side Cylinder Ports (PA15 only)
46 = Base, Individual Exhaust, Side Cylinder Ports, Speed control (PA15 only)
48 = Base, Individual Exhaust, Side and Bottom Cylinder Ports, Speed Control (PA15 only)
49 = Base, Common Exhaust, Side Cylinder Ports, Speed Control (PA15 only)
54 = Base, Common Exhaust, Side and Bottom Cylinder Ports (PA15 only)
55 = Base, Common Exhaust, Side and Bottom Cylinder Ports, Speed Control (PA15 only)

Voltage
00 = Manifold Block, w/o Valve
20 = 24 VAC, 50-60 Hz
30 = 110-120 VAC, 50-60 Hz
40 = 220-240 VAC, 50-60 Hz
60 = 12 VDC
61 = 24 VDC

Options
000 = No Options
11B = Flush Locking Manual Override
11Y = Extended Non- Locking Manual Override
11Z = Extended Locking Manual Override
12A = FKM Seals on Sleeve Assembly
12B = Lubricant Free Assembly
13A = 4 Foot Leads
15W = 5-Pin Straight Mini Connector in Mounting; Pin 1=A+(14+), 2=A-(14-), 3=Gnd, 4=B+(12+), 5=B-(12-)
16T = Adds Bottom P (1) Port to Mounting
17N = Surge Suppression (DC Only)
19M = Terminal Block in Mounting
46T = Zinc Plated Solenoid Armature (A C Only)
47J = 5-Pin Straight Mini Connector in Mounting; Pin 1=B+(12+), 2=A-(14-), 3=Gnd, 4=A+(14+), 5=B-(12-)
56Y = 4 Pin Straight Micro Connector in Mounting; Pin 1=Not Used, 2=12+(B+), 3=Com, 4=14+(A+)

Combination Options
41W = (11B) Flush Locking Manual Override & (17N) Surge Suppression (DC Only)
48S = (11B) Flush Locking Manual Override & (19M) Terminal Block in Mounting
26K = (11B) Flush Locking Manual Override & (46T) Zinc Plated Solenoid Armature (A C Only)
46Z = (11Z) Extended Locking Manual Override & (17N) Surge Suppression (DC Only)
26C = (11Z) Extended Locking Manual Override & (19M) Terminal Block in Mounting
48Q = (11Z) Extended Locking Manual Override & (46T) Zinc Plated Solenoid Armature (A C Only)
46P = (17N) Surge Suppression (DC Only) & (19M) Terminal Block in Mounting

Port Type
0 = NPTF Pressure Ports w/NPTF Conduit Ports or Valve Unit w/o Mounting
G = ISO228/1-G Pressure Ports w/ ISO Metric - 1.5mm Pitch Conduit Ports

Wiring Option
K = Plug-in, w/ Light, VAC
M = Plug-in, w/ Light, VDC
2 = DIN Plug-in Solenoid, VAC
4 = DIN Plug-in Solenoid, VDC
6 = DIN Plug-in Solenoid, w/ Light, VAC
O = Non Plug-in (hardwired), VAC or Mounting Only w/ Electrical Receptacle
B = Non Plug-in (hardwired), VDC or Mounting Only w/o Electrical Receptacle

Information subject to change without notice. For ordering information or regarding your local sales office visit www.numatics.com.

Flexiblok Diagrams

Sample diagram with regulators Mark 15 3-pressure selector Flexiblok with output valve and separate 4-way (3/8 NPTF).

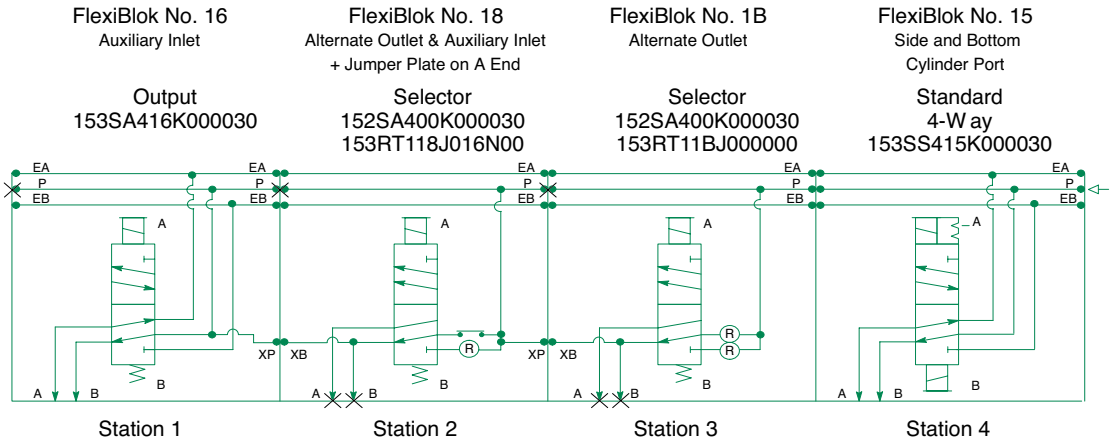

Blocking discs must be installed in “P” gallery, as shown.

Information subject to change without notice. For ordering information or regarding your local sales office visit www.numatics.com.

numatics

How to Order

Regulators

153 RS 1 15 J 0 000 00

Valve Series & Port Size
152* = 1/4
153 = 3/8
*Regulator unit only.

Regulator Type
RS = Single Pressure to Valve P(1)
RD = Dual Pressure to Valve EB(3) & EA(5)
RC = Dual Pressure w/ Non-Relieving Checks to Valve EB(3) & EA(5)
RQ = Dual Pressure w/ Relieving Checks to Valve EB(3) & EA(5)
RE = External Jumper Plate, Dual Pressure to Ports A(4) & B(2)
RT = Dual Pressure to Valve P(1) & EB(3)

Pressure Range
1 = 10-130 PSIG (0.7-9 bar)
3 = 3-30 PSIG (0.2-2 bar)
4 = 5-60 PSIG (0.3-4.1 bar)

Mounting
00 = Regulator Unit, w/o Mounting
15 = Manifold Block, Side and Bottom Cylinder Ports
16 = Manifold Block, Side and Bottom Cylinder Ports, Auxiliary Inlet
1B = Manifold Block, Side and Bottom Cylinder Ports, Alternate Outlet
18 = Manifold Block, Side and Bottom Cylinder Ports, Alternate Outlet & Auxiliary Inlet
25 = Manifold Block, Side and Bottom Cylinder Ports, Speed Control
3A = Plug-in Base, Individual Exhaust, Side Ports (Mark 15 only)
3B = Plug-in Base, Individual Exhaust, Side and Bottom Ports (Mark 15 only)
3C = Plug-in Base, Individual Exhaust, Side Ports, Speed Control (Mark 15 only)
3D = Plug-in Base, Individual Exhaust, Side and Bottom Ports, Speed Control (Mark 15 only)
31 = Plug-in Base, Common Exhaust, Side Ports (Mark 15 only)
32 = Plug-in Base, Common Exhaust, Side and Bottom Ports (Mark 15 only)
35 = Plug-in Base, Common Exhaust, Side Ports, w/ Speed Control (Mark 15 only)
36 = Plug-in Base, Common Exhaust, Side and Bottom Ports, w/ Speed Control (Mark 15 only)
41 = Base, Individual Exhaust, Side ports (PA15 only)
43 = Base, Individual Exhaust, Side and Bottom Ports (PA15 only)
44 = Base, Common Exhaust, Side Ports (PA15 only)
46 = Base, Individual Exhaust, Side Ports w/ Speed control (PA15 only)
48 = Base, Individual Exhaust, Side and Bottom Ports w/Speed Control (PA15 only)
49 = Base, Common Exhaust, Side Ports with Speed Control (PA15 only)
54 = Base, Common Exhaust, Side and Bottom Ports (PA15 only)
55 = Base, Common Exhaust, Side and Bottom Ports w/ Speed Control (PA15 only)

Voltage
00 = No Voltage

Options
Single Options
000 = No Options
12H = Regulator Less Gauge
13A = 4 Foot Leads
15W = 5-Pin Straight Mini Connector in Mounting; Pin 1=A+, 2=A-, 3=Gnd, 4=B+, 5=B-
19M = Terminal Block in Mounting
16N = Jumper for Supply Pressure to Valve, A (14) End
16P = Jumper for Supply Pressure to Valve, B (12) End
16T = Adds Bottom P (1) Port to Mounting
16W = Fitting(s) for Top Facing Gauge
16Y = Regulator Less Gauge and Fittings
17A = Plugged Regulator Gauge Port
47J = 5-Pin Straight Mini Connector in Mounting; Pin 1=B+(12+), 2=A-(14-), 3=Gnd, 4=A+(14+) 5=B-(12-)
56Y = 4 Pin Straight Micro Connector in Mounting; Pin 1=Not Used, 2=12(B+), 3=Com, 4=14(A+)

Combination Options
27J = (12H) Regulator Less Gauge & (16N) Jumper for Supply Pressure to Valve, A (14) End
27K = (12H) Regulator Less Gauge& (16P) Jumper for Supply Pressure to Valve, B (12) End
27M = (16P) Jumper for Supply Pressure to Valve, B (12) End & (16W) Fitting(s) for Top Facing Gauge
27P = (16N) Jumper for Supply Pressure to Valve, A (14) End & (16W) Fitting(s) for Top Facing Gauge
27Q = (12H) Regulator Less Gauge & (16W) Fitting(s) for Top Facing Gauge
45E = (16N) Jumper for Supply Pressure to Valve, A (14) End & (16Y) Regulator Less Gauge and Fittings
46F = (16W) Fitting(s) for Top Facing Gauge & (19M) Terminal Block in Mounting
48D = (16P) Jumper for Supply Pressure to Valve, B (12) End & (19M) Terminal Block in Mounting
48G = (16N) Jumper for Supply Pressure to Valve, A (14) End & (19M) Terminal Block in Mounting
54A = (16P) Jumper for Supply Pressure to Valve, B (12) End & (16Y) Regulator Less Gauge and Fittings
58Z = (12H) Regulator Less Gauge & (19M) Terminal Block in Mounting
67P = (16Y) Regulator Less Gauge and Fittings & (19M) Terminal Block in Mounting

Port Type
0 = NPTF Pressure Ports w/NPTF Conduit Ports or Valve Unit w/o Mounting
G = ISO228/1-G Pressure Ports w/ISO Metric - 1.5mm Pitch Conduit Ports

Wiring Option
J = Plug-in Receptacle Assembly (MK 15 only)
O = Non Plug-In (PA 15 only)

Information subject to change without notice. For ordering information or regarding your local sales office visit www.numatics.com.

How to Order

Manifold Assembly

AK 0 J H 0000 4 N STD

Electrical/Electronics Type & Location
0 = Standard
V = Fieldbus Electronics w/ Internal Wiring

Valve Line
J = Mark 15 Series or PA 15 Series

Number of Valve Stations

A = 1	E = 5	I = 9	M = 13
B = 2	F = 6	J = 10	N = 14
C = 3	G = 7	K = 11	O = 15
D = 4	H = 8	L = 12	P = 16

Options
STD = Standard
A05 = All Stations Wired for Double Solenoid Valves ('AKV...' only)

Port Type
N = NPTF Pressure
G = ISO228/1-G Pressure Ports w/ ISO Metric - 1.5mm Pitch Conduit Ports

End Plate Port Size
4 = 1/2
X = Two or More Valve Series in One Manifold

Valve Line and Number of Stations
Second Valve Series
0 = No Second Valve Series
H = Mark 8
M = Mark 55 Compact

Number of Stations of Second Valve Series
0 = None

A = 1	E = 5	I = 9	M = 13
B = 2	F = 6	J = 10	N = 14
C = 3	G = 7	K = 11	O = 15
D = 4	H = 8	L = 12	P = 16

Third Valve Series
0 = No Third Valve Series
J = Mark 15 / PA 15

Number of Stations of Third Valve Series
0 = None

A = 1	E = 5	I = 9	M = 13
B = 2	F = 6	J = 10	N = 14
C = 3	G = 7	K = 11	O = 15
D = 4	H = 8	L = 12	P = 16

Example order:

List in order, left to right, facing cylinder ports

Assembly Kit	AK0JF00004NSTD
Station 1	153SA415M000061
Station 2	153SS425M000061
Station 3 & 4	152SA415M000061
Station 5	152SS615M000061
Station 6	153SS425M000061
	ASSEMBLED

Information subject to change without notice. For ordering information or regarding your local sales office visit www.numatics.com.

numatics

Dimensions: Inches (mm)

Mark 15

Valve on Individual Base

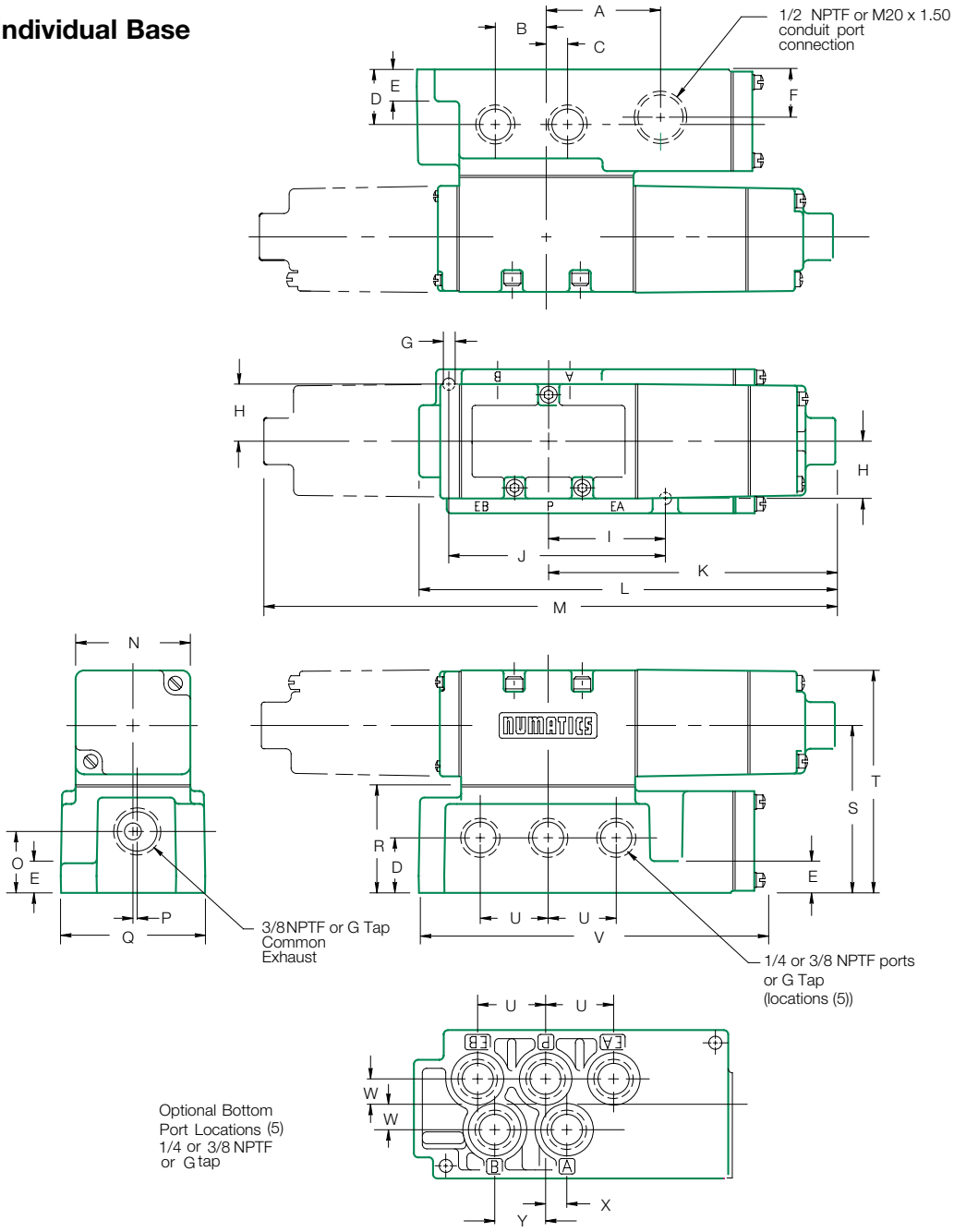

A	B	C	D	E	F	G	H	I	J	K (AC)	K (DC)	L (AC)	L (DC)	M (AC)
1.72 (43.7)	0.78 (19.8)	0.31 (7.9)	0.84 (21.3)	0.47 (11.9)	0.72 (18.3)	0.20 (5.1)	0.88 (22.4)	1.75 (44.5)	3.25 (82.6)	4.43 (112.5)	4.95 (125.7)	6.34 (161.0)	6.86 (174.2)	8.86 (225.0)

M (DC)	N	O	P	Q	R	S	T	U	V	W	X	Y
9.90 (251.5)	1.70 (44.7)	0.91 (23.0)	0.06 (1.5)	2.16 (54.9)	1.56 (39.6)	2.47 (62.7)	3.30 (83.8)	1.00 (25.4)	5.11 (130.0)	0.38 (9.6)	0.31 (7.9)	0.78 (19.8)

Information subject to change without notice. For ordering information or regarding your local sales office visit www.numatics.com.

Dimensions: Inches (mm)

PA 15 Valve on Individual Base

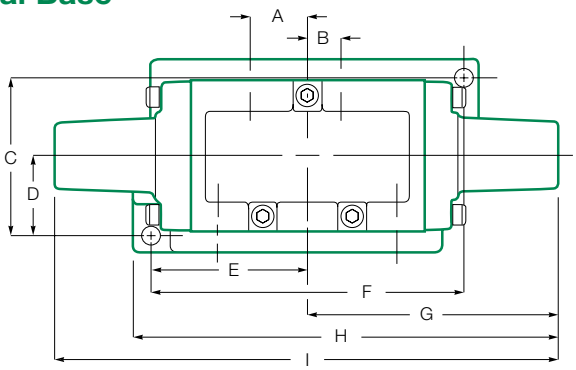

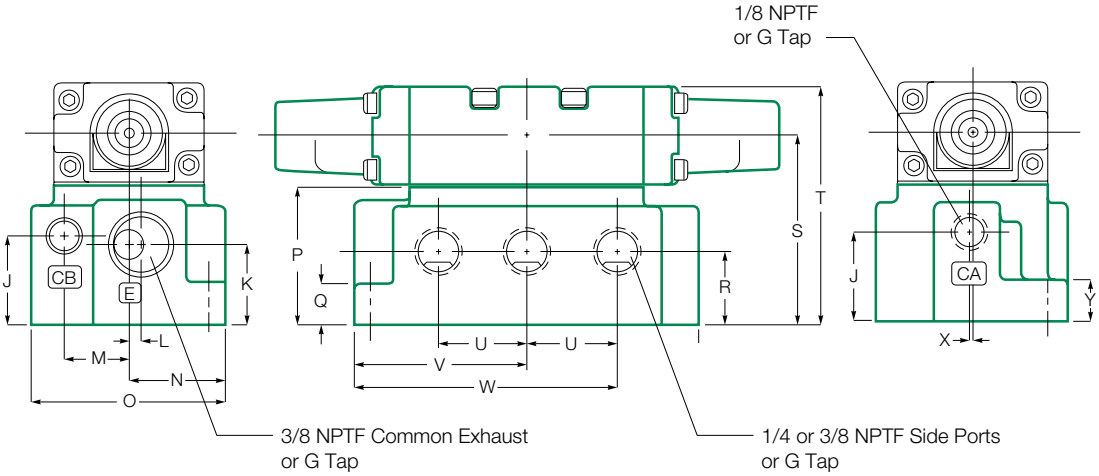

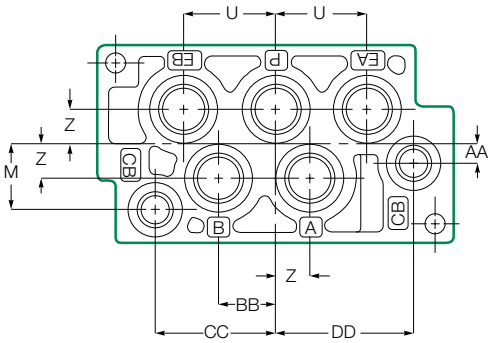

A	B	C	D	E	F	G	H	I	J	K	L	M	N	O
0.63 (15.9)	0.38 (9.52)	1.75 (44.4)	0.88 (22.2)	1.75 (44.4)	3.50 (88.9)	2.81 (71.4)	4.75 (120.6)	5.62 (142.7)	1.00 (25.4)	0.91 (23.0)	0.13 (3.2)	0.72 (18.2)	1.08 (27.4)	2.16 (54.9)

P	Q	R	S	T	U	V	W	X	Y	Z	AA	BB	CC	DD
1.56 (39.6)	0.47 (11.9)	0.84 (21.3)	2.15 (54.6)	2.69 (68.3)	1.00 (25.4)	1.94 (49.3)	3.88 (98.6)	0.03 (0.8)	0.47 (11.9)	0.38 (9.5)	0.22 (5.5)	0.63 (15.9)	1.31 (33.2)	1.50 (38.1)

Information subject to change without notice. For ordering information or regarding your local sales office visit www.numatics.com.

numatics

Dimensions: Inches (mm)

Mark 15 Manifold Assy.

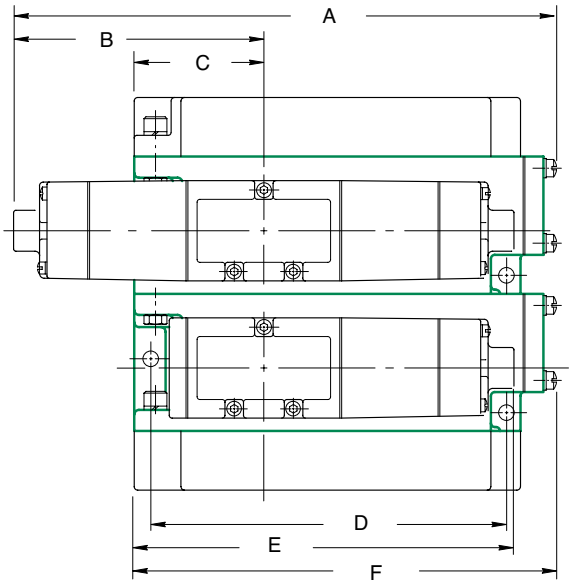

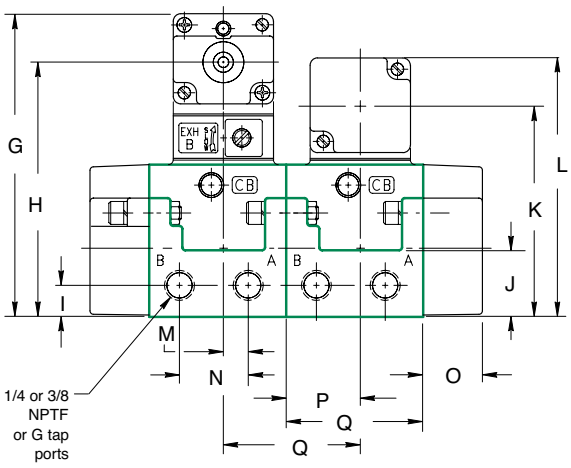

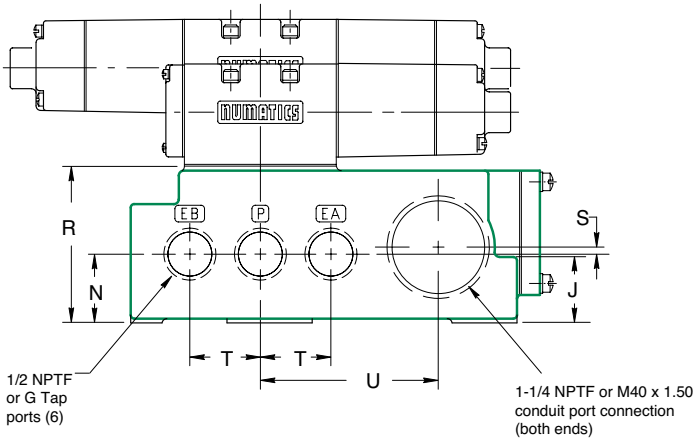

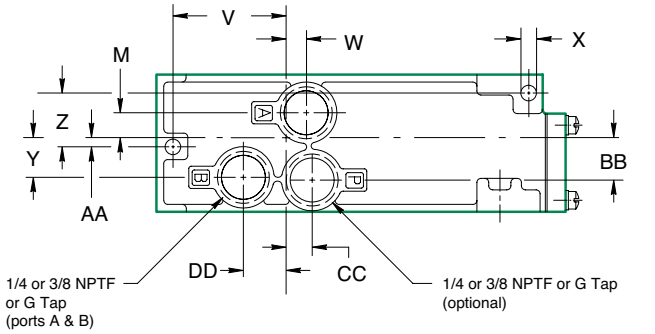

A (AC)	A (DC)	B (AC)	B (DC)	C	D	E (AC)	E (DC)	F	G	H	I	J	K	L	M	N
9.13 (231.9)	9.86 (250.4)	4.22 (107.2)	4.95 (125.7)	2.19 (55.6)	6.00 (152.4)	6.41 (162.8)	7.14 (181.4)	7.09 (180.8)	5.11 (129.8)	4.29 (109.0)	0.53 (13.5)	1.12 (28.4)	3.54 (89.9)	4.36 (110.7)	0.42 (10.7)	1.16 (29.5)

O	P	Q	R	S	T	U	V	W	X	Y	Z	AA	BB	CC	DD
1.06 (26.9)	1.25 (31.7)	2.31 (58.7)	2.62 (66.5)	0.12 (3.0)	1.19 (30.2)	3.00 (76.2)	1.91 (48.5)	0.34 (8.6)	0.26 (6.6)	0.67 (17.0)	0.91 (23.1)	0.16 (4.1)	0.74 (18.8)	0.44 (11.2)	0.72 (18.3)

Information subject to change without notice. For ordering information or regarding your local sales office visit www.numatics.com.

Dimensions: Inches (mm)

PA 15 Manifold Block Assembly

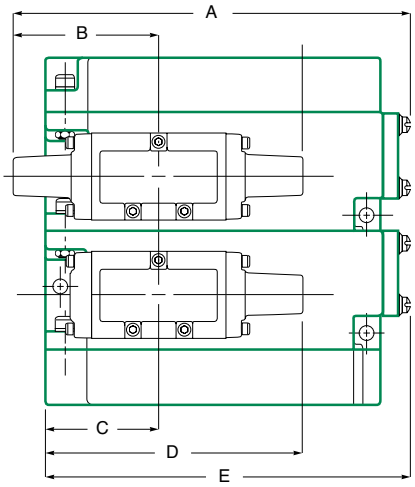

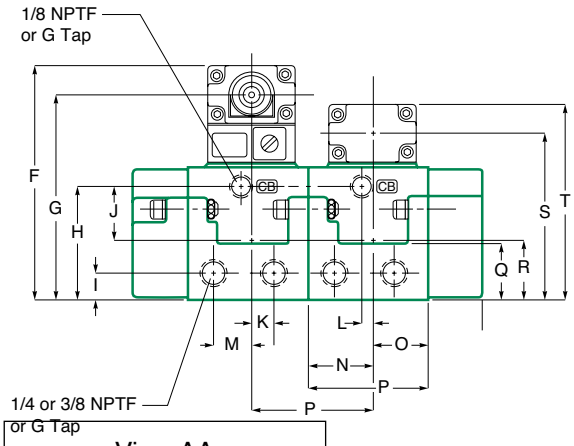

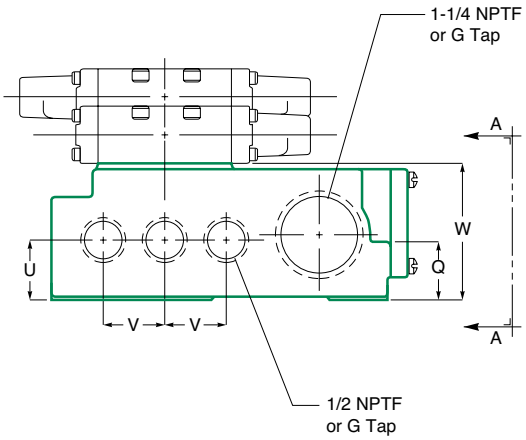

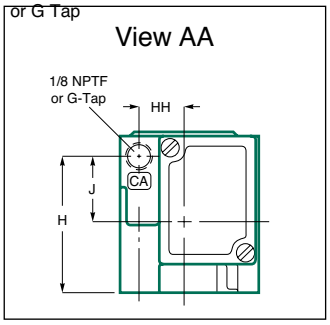

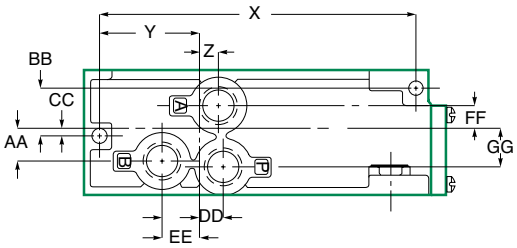

A	B	C	D	E	F	G	H	I	J	K	L	M	N	O	P	Q
7.72 (196.1)	2.81 (71.4)	2.19 (55.6)	5.00 (127.0)	7.10 (180.3)	4.51 (114.6)	3.97 (100.8)	2.22 (56.4)	0.53 (13.5)	1.06 (26.9)	0.42 (10.7)	0.20 (5.1)	1.16 (29.5)	1.25 (31.7)	1.06 (26.9)	2.31 (58.9)	1.12 (28.4)

R	S	T	U	V	W	X	Y	Z	AA	BB	CC	DD	EE	FF	GG	HH
1.16 (29.5)	3.22 (81.8)	3.76 (95.5)	1.16 (29.5)	1.19 (30.2)	2.62 (66.5)	6.00 (152.4)	1.91 (48.5)	0.34 (8.6)	0.67 (17.0)	0.91 (23.1)	0.16 (4.1)	0.44 (11.2)	0.72 (18.3)	0.42 (10.7)	0.74 (18.8)	0.75 (19.1)

Information subject to change without notice. For ordering information or regarding your local sales office visit www.numatics.com.

numatics

Sandwich Pressure Regulators

Types: RS / RD / RE / RT / RC / RQ

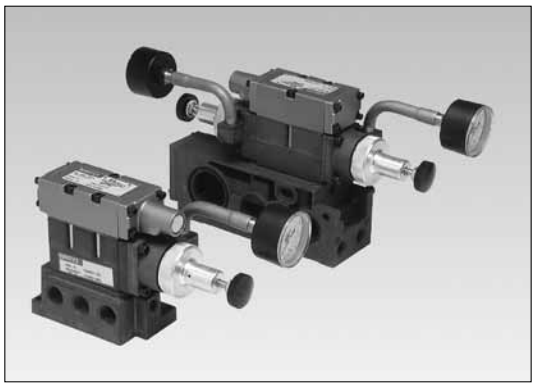

Type RS

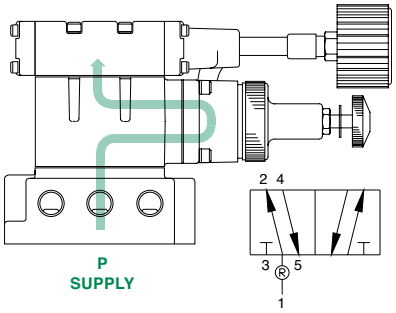

Single pressure from a single supply.

Type RD

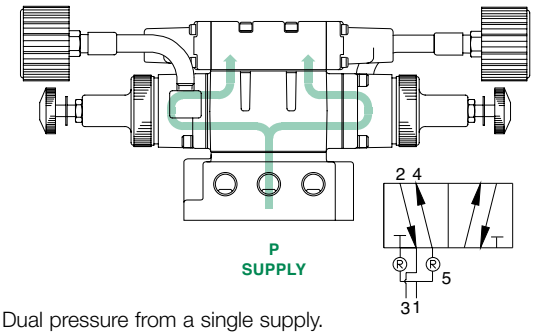

Dual pressure from a single supply.

Type RC

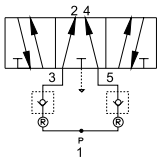

Type RC is Non-Relieving: traps downstream pressure if upstream pressure is exhausted.

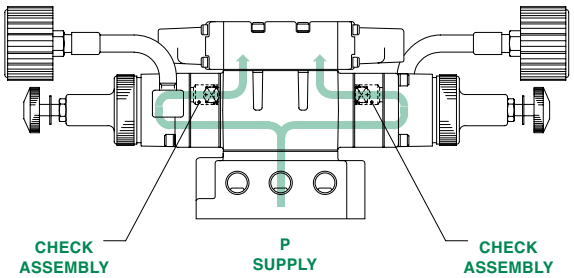

Type RQ

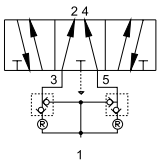

Type RQ is Relieving: exhaust pressure in cylinder if upstream pressure is exhausted.

Type RE

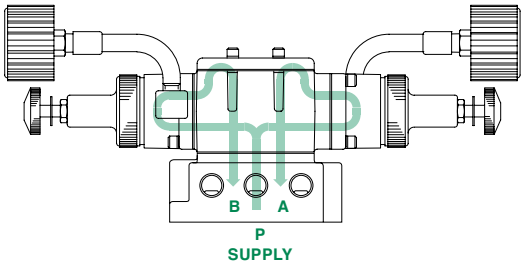

External outlet regulator used with jumper plate for single or dual pressure.

Type RT

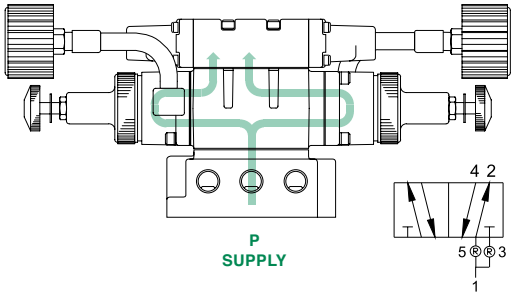

Two-pressure selector used for multi-pressure applications.

Information subject to change without notice. For ordering information or regarding your local sales office visit www.numatics.com.

Sandwich Pressure Regulator

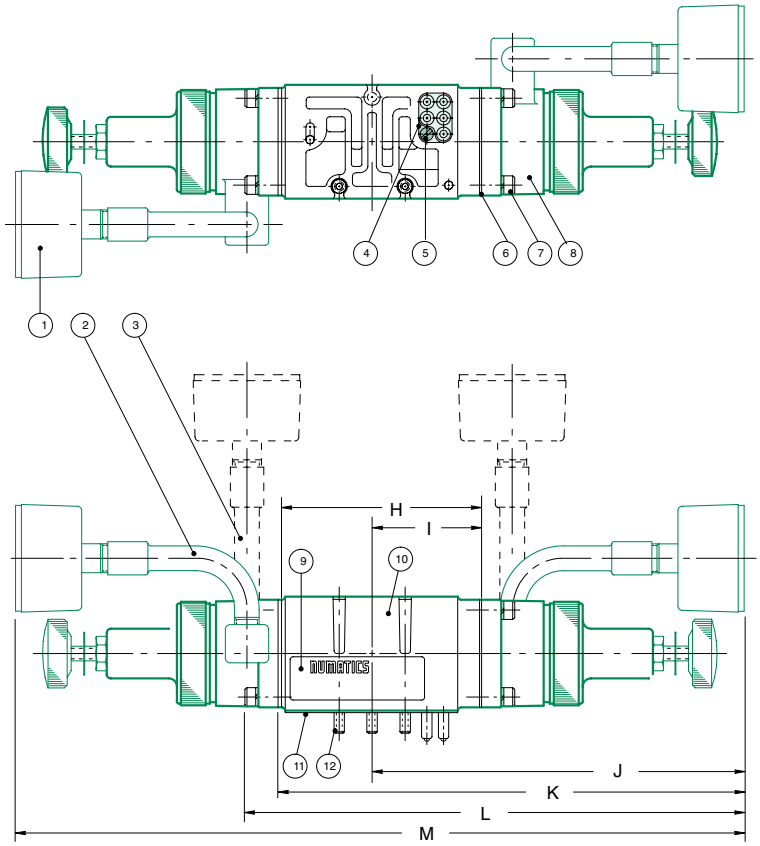

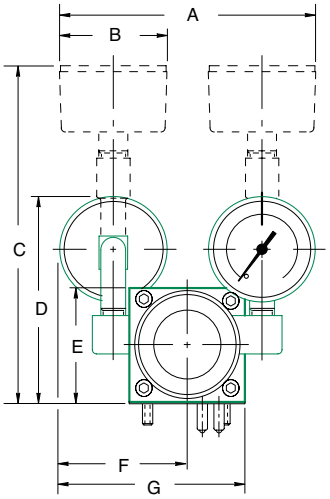

Check Assembly Kits

RC: 239-533

RQ: 239-537

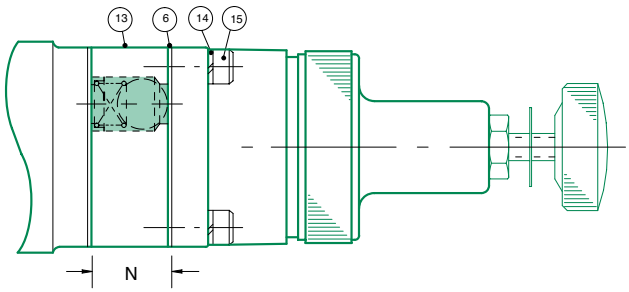

*RS models require (1).
**(1) for RS; (2) for RD, RE, RT; (4) for RC, RQ.
~RS models require (4).

Parts List

Det. No.	No. Req'd	Part Name	Part No.
1	2*	Gauge (See Chart on p.12)	
2	2*	90 Tube Fitting	134-289
3	2*	Straight Fitting	134-293
4	1	Plug Receptacle Assembly	230-257
5	1	Screw	127-342
6	**	Gasket to regulator	113-272
7	8~	Screw	127-235
8	2*	Reg. Assembly (not sold separately)	
9	1	Nameplate	122-551
10	1	Regulator Block RS RD, RC, RQ RT RE	125-311 125-312 125-313 125-316
11	1	Gasket body/base	113-264
12	3	Studs	127-304
13	2	Check Assembly (not sold separately)	
14	8	Hi-Collar Lockwasher (RC, RQ only)	128-144
15	8	Screw (RC, RQ only)	127-227

A	B	C	D	E	F	G	H	I	J	K	L	M	N
3.79 (96.3)	1.54 (39.1)	5.70 (144.0)	3.07 (78.0)	1.73 (44.0)	1.90 (48.3)	2.75 (69.9)	3.03 (76.8)	1.66 (42.2)	5.79 (147.1)	7.145 (181.5)	7.33 (186.0)	10.92 (277.0)	0.66 (16.7)

Information subject to change without notice. For ordering information or regarding your local sales office visit www.numatics.com.

numatics

Regulator Service Kit 229-640

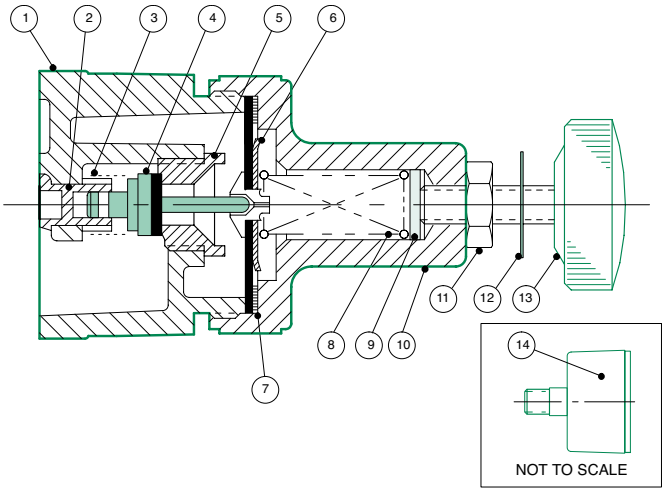

Parts List

Det. No.	No. Req'd	Part Name	Pressure Range PSIG		
			3-30	5-60	10-130
1	1	Regulator Assembly** (not sold separately)			
2*	1	Retainer	116-291	116-291	116-291
3*	1	Spring	115-210	115-210	115-210
4*	1	Poppet Assembly	221-121	221-121	221-121
5*	1	Poppet Seat	124-142	124-142	124-142
6*	1	Diaphragm Assembly	213-285	213-285	213-285
7*	1	Washer	116-292	116-292	116-292
8	1	Bonnet Spring	115-211	115-212	115-213
9*	1	Spring Guide	116-293	116-293	116-293
10	1	Bonnet	125-314	125-314	125-314
11	1	Locknut	128-177	128-177	128-177
12	1	Pressure Label	122-508	122-509	122-510
13	1	Knob Assembly	213-284	213-284	213-284
14		Regulator Gauges (with PSIG of...)	214-116 (0-60)	214-117 (0-100)	214-103 (0-160)
**Regulator Unit Kits (includes regulator assembly, gaskets, screws)			229-641	229-642	229-643

Jumper Plate Kit 229-644

(includes gasket #113-434 and screws #127-235)

RE Top Jumper Plate Kit 229-620

(includes gasket #113-264 and screws #127-235)

Mark 15

Valve, Speed Control and Regulator Plug-In Assembly

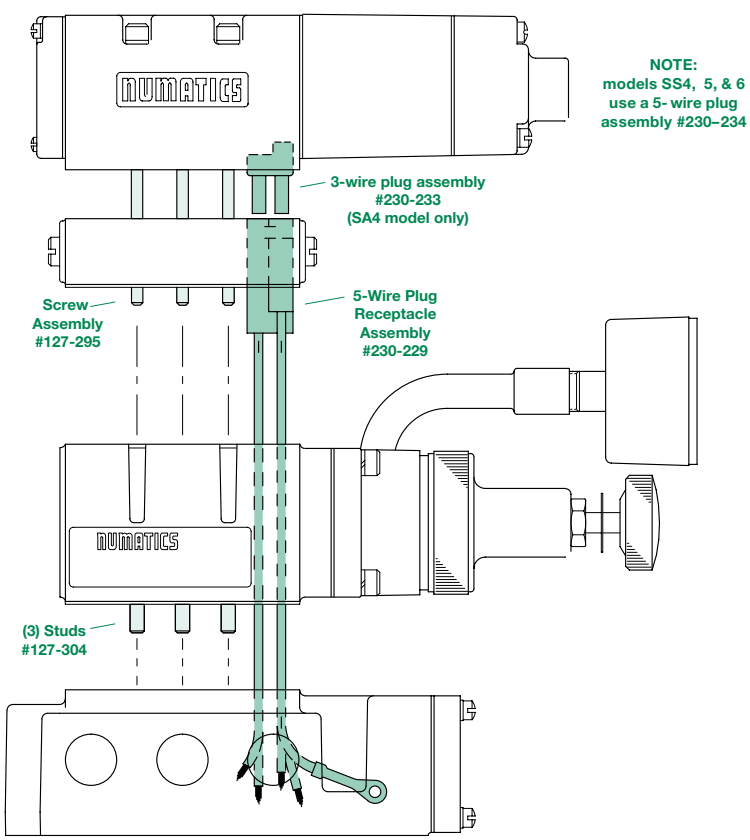

EXAMPLE

152SA401K000030

Single solenoid valve unit + speed control sandwich with 5-wire plug receptacle and extra long screws

153RS131O000000

3/8 NPTF single pressure regulator (10-130 PSIG) with no receptacle mounted on an individual base with side ports and common exhaust

EXAMPLE ORDER:
Valve: 152SA401K000030
Regulator: 153RS131O000000
ASSEMBLED

Information subject to change without notice. For ordering information or regarding your local sales office visit www.numatics.com.

End Plate Kit

NPTF 229-621

G Tap 229-993
G galleries/metric conduit

G Tap 239-530
G galleries/NPTF conduit

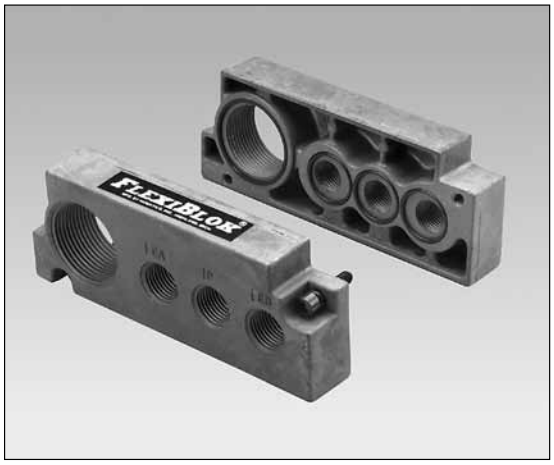

Parts List

Number Required	Part Name	Part No.		
		NPTF	G Tap w/ Metric Conduit	G Tap w/ NPTF Conduit
1	Seal	126-121	126-121	126-121
1	Right End Plate	104-217	104-287	104-468
1	Nameplate	122-199	122-199	122-199
1	Left end Plate	104-218	104-288	104-288
2	Screws	127-152	127-152	127-152
3	Seal	126-209	126-209	126-209

Blank Station Plate Kit 229-620

Includes gasket #113-264 and (3) screws #127-235

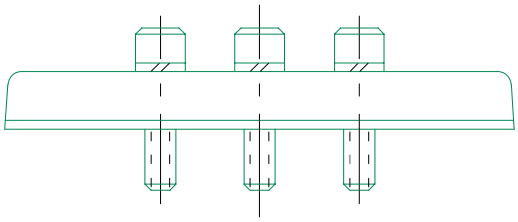

Blocking Disc Kit 124-141

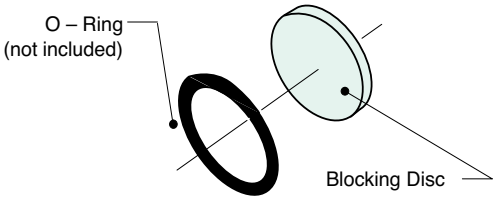

Adaptor Kits with End Plates

Mark 15 RIGHT* of Mark 8 229-695

Includes kit #229-694 (adaptor, screws, seals)
+ Mark 15 and 8 end plates

Mark 15 LEFT* of Mark 8 229-693

Includes kit #229-692 (adaptor, screws, seals)
+ Mark 15 and 8 end plates

Mark 15 RIGHT* of Mark 55 Compact 229-858

Includes kit #229-857 (adaptor, screws, seals)
+ Mark 15 and 55 end plates

Mark 15 LEFT* of Mark 55 Compact 229-860

Includes kit #229-859 (adaptor, screws, seals)
+ Mark 15 and 55 end plates

PA 55 COMPACT RIGHT* of PA 15 229-860

Includes kit #229-859 (adaptor, screws, seals)
+ Mark 55 and 15 end plates

PA 55 COMPACT LEFT* of PA 15 229-858

Includes kit #229-857 (adaptor, screws, seals)
+ Mark 55 and 15 end plates

*Left/right when viewed from the cylinder ports of assembly.

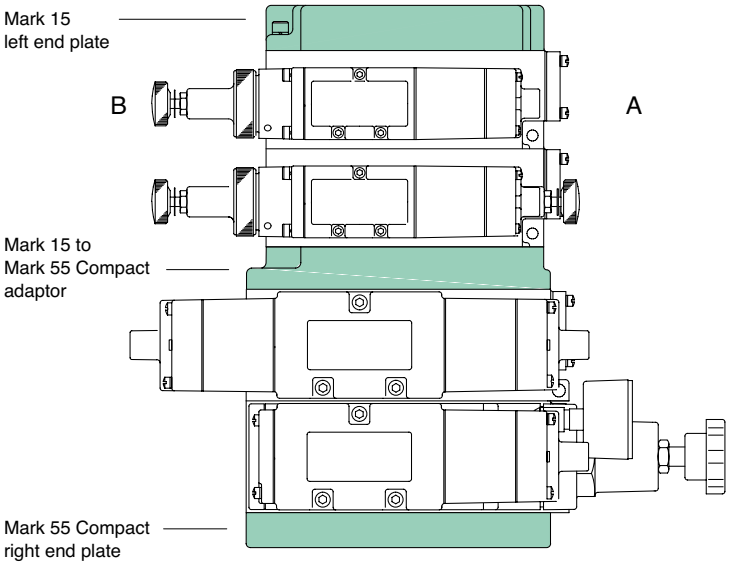

Information subject to change without notice. For ordering information or regarding your local sales office visit www.numatics.com.

numatics

Mark 15 Speed Control Kit

229-622 **229-664** (Kit with Plug)

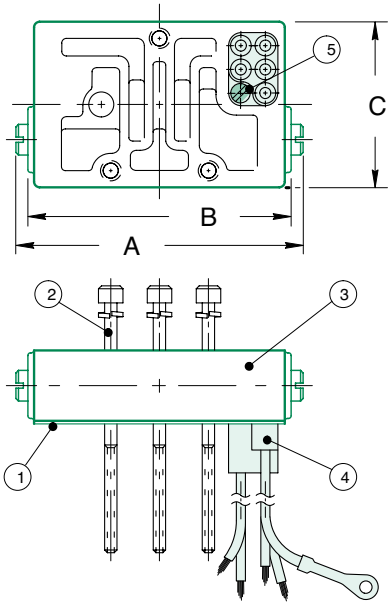

Mounts between valve and base.

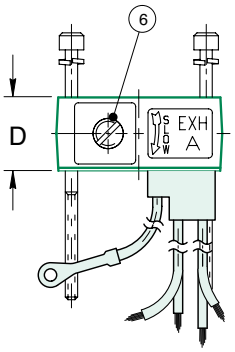

Parts List

Port Type	Part. No.	Part Name	Part No.
1 *	1	Gasket	113-264
2 *	3	Screw Assembly	127-295
3 *	1	Speed Control (not sold separately)	
4 **	1	Receptacle Assembly	230-229
5 **	1	Receptacle Screw	127-169
6 *	2	Needle Assembly	213-180

*Indicates parts included in kit.
**Included in 229-664 kit only.

Dimensions: Inches (mm)

A	B	C	D
2.94 (74.7)	2.69 (68.0)	1.69 (43.0)	0.75 (19.0)

PA 15 Speed Control Kit

229-708

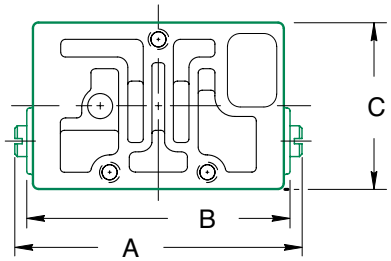

Parts List

Det. No.	No. Req'd	Part Name	Part No.
1	1	Gasket	113-264
2	3	Screw Assembly	127-323
3	2	Needle Assembly	213-180

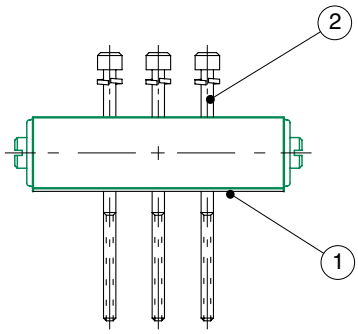

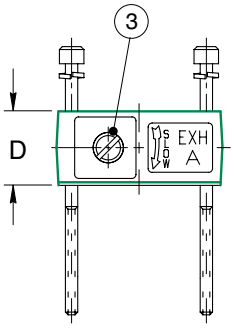

Dimensions: Inches (mm)

A	B	C	D
2.94 (74.7)	2.69 (68.0)	1.69 (43.0)	0.75 (19.0)

Mounts between valve and base.

Information subject to change without notice. For ordering information or regarding your local sales office visit www.numatics.com.

Mark 15 Base Assembly Kits

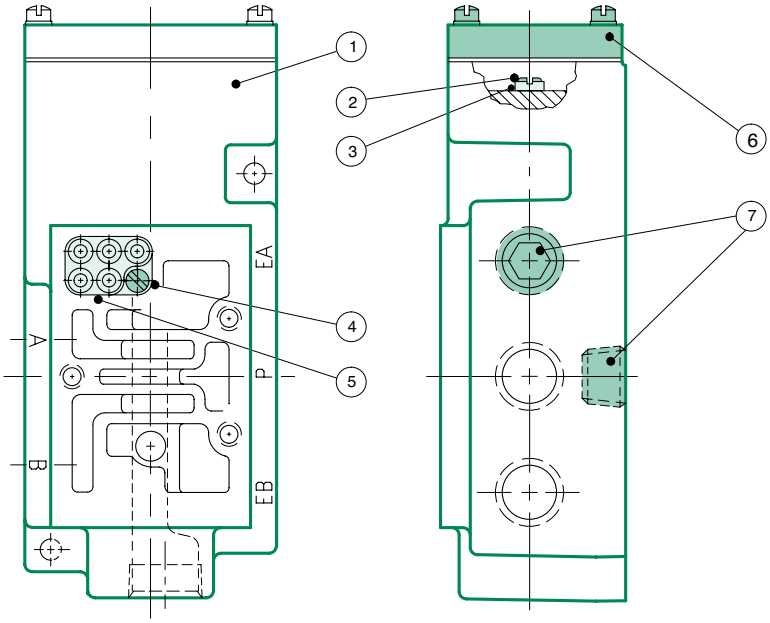

Parts List

Det. No.	No. Req'd	Part Name	Part No.
1 *	1	Base (not sold separately)	
2 *	2	Screw	127-176
3 *	1	Washer	128-162
4 *	1	Screw	127-342
5 *	1	Receptacle Assembly Plug-in units only	230-229
6 *	1	Conduit Cover Assembly	205-302
7 *	**	Plug: 1/4 NPTF 3/8 NPTF G 1/4 G 3/8	129-101 129-102 129-161 129-163

*Indicates parts included in kit.
**Not used on 3A, 3C; plugs vary - consult factory.

Base	Exhaust	1/4 NPTF		3/8 NPTF		G 1/4		G 3/8	
		Plug-In	No Plug	Plug-In	No Plug	Plug-In	No Plug	Plug-In	No Plug
31 & 35: Side ports only	common	203-353	203-346	203-361	203-357	203-261	203-659	203-557	203-660
32 & 36: Side & bottom ports	common	203-354	203-350	203-362	203-358	203-663	203-661	203-664	203-662
3A & 3C: Side ports only	individual	203-351	203-347	203-359	203-355	203-611	203-665	203-612	203-645
3B & 3D: Side & bottom ports	individual	203-352	203-348	203-360	203-356	203-668	203-667	203-670	203-669

PA 15
Base Assembly Kit with Tapped CA and CB Ports

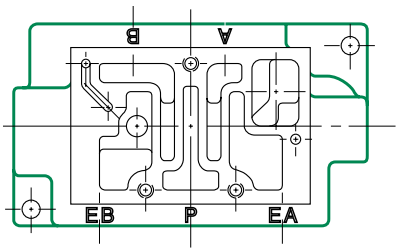

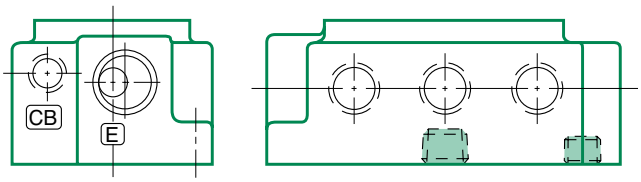

Base Description	1/4 NPTF	3/8 NPTF
41 & 46: Side ports, individual exhaust	103-485	103-489
43 & 48: Side & bottom ports, individual exhaust	203-451	203-454
44 & 49: Side ports, common exhaust	203-452	203-455
54 & 55: Side & bottom ports, common exhaust	203-453	203-456

Information subject to change without notice. For ordering information or regarding your local sales office visit www.numatics.com.

numatics

Mark 15 Flexiblok Manifold Kits

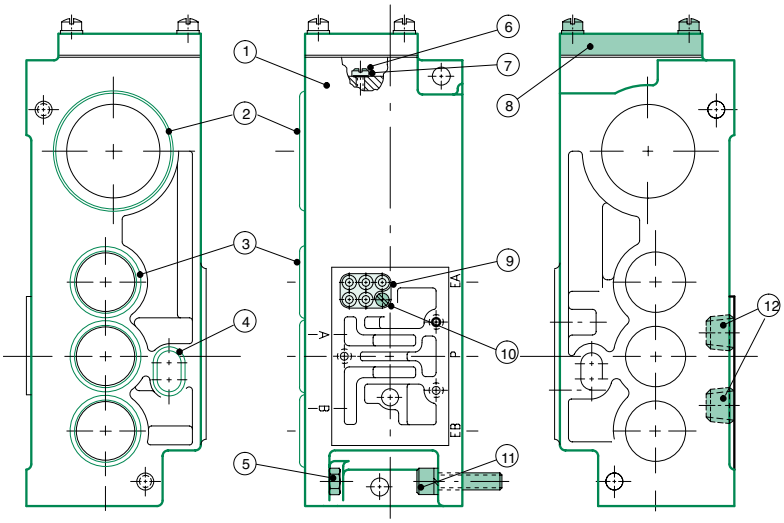

Parts List

Det. No.	No. Req'd	Part Name	Part No.
1 *	1	Valve Blok (not sold separately)	
2 *	1	Seal	126-121
3 *	3	Seal	126-209
4 *	1	Seal (for 1B & 18)	126-202
5 *	2	Nut	128-103
6 *	2	Screw	127-176
7 *	1	Washer	128-162
8 *	1	Conduit Cover Assembly	205-303
9 *	1	Receptacle Assembly Plug-in units only	230-229
10 *	1	Screw - receptacle	127-342
11 *	2	Screw	127-152
12 *	2	Plug: 1/4 NPTF 3/8 NPTF G 1/4 G 3/8	129-101 129-102 129-161 129-163

*Indicates parts included in kit.

Flexiblok Description	1/4 NPTF		3/8 NPTF		G 1/4		G 3/8	
	Plug-In	No Plug	Plug-In	No Plug	Plug-In	No Plug	Plug-In	No Plug
#15: Side & bottom Cylinder ports	229-629	229-627	229-630	229-628	239-210	239-367	229-999	239-368
#15: Side & bottom cyl. ports w/bottom P port	229-632	229-631	229-634	229-633	239-371	239-369	239-372	239-370
#15 & 19M Option (Terminal Strip)	239-732	239-1863	239-1029	239-1171	239-2085	N/A	239-2086	N/A
#16: Auxiliary inlet	229-792	229-789	229-798	229-795	239-375	239-373	239-376	239-374
#1B: Alternate outlet	229-793	229-790	229-799	229-796	239-383	239-381	239-384	239-382
#18: Alternate outlet & auxiliary inlet	229-794	229-791	229-800	229-797	239-379	239-377	239-380	239-378

PA 15
Flexiblok Manifold Kits with Tapped CA and CB Ports

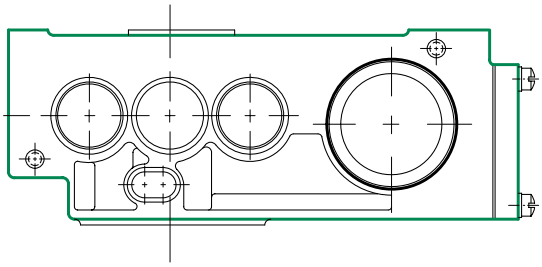

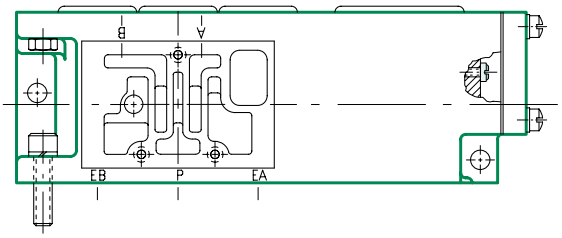

Base Description	1/4 NPTF	3/8 NPTF
15: Manifold w/side & bottom cylinder ports	229-709	229-710
15: w/side & bottom cyl. ports & bottom P port	229-711	229-712
16: Auxiliary inlet	229-896	229-899
1B: Alternate outlet	229-897	229-900
18: Alternate outlet & auxiliary inlet	229-898	229-901

Information subject to change without notice. For ordering information or regarding your local sales office visit www.numatics.com.

Service Kits and Parts

Kit No. MK15-K1* (For Models 152SA4, 153SA4)

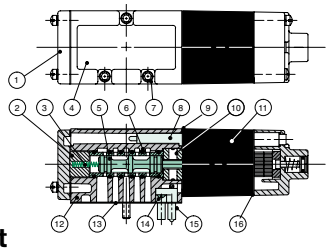

Parts List

Det. No.	No. Req'd	Part Name	Part No.
1	1	End Plate Assembly	204-215
2*	1	Spring Retainer	116-286
3*	1	Spring	115-214
4	1	Nameplate	122-941
5	1	Sleeve Assembly w/seals	209-246**
6*	6	Seal	126-202
7	3	Screw	127-294
8	1	Electrical Receptacle	125-309
9*	2	Gasket solenoid/valve	113-268
10*	1	Detented Body	110-113
11	1	Solenoid Capsule Assembly	See p. 21
12	1	Valve Body (not sold separately)	
13*	1	Gasket body/base	113-264
14	1	Screw	127-169
15	1	3-Wire Plug Assembly	230-233
16*	1	Gasket solenoid/end cap	113-267

Kit No. MK15-K2* (For Models 152SS4, 153SS4)

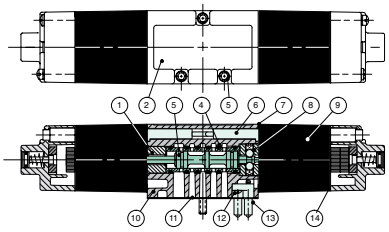

Parts List

Det. No.	No. Req'd	Part Name	Part No.
1*	1	Spacer	116-285
2	1	Nameplate	122-941
3	1	Sleeve Assembly w/seals	209-247**
4*	6	Seal	126-202
5	3	Screw	127-294
6	2	Electrical Receptacle	125-309
7*	2	Gasket solenoid/valve	113-268
8*	1	Detented Assembly	210-116
9	2	Solenoid Capsule Assembly	See p. 21
10	1	Valve Body (not sold separately)	
11*	1	Gasket body/base	113-264
12	1	Screw	127-169
13	1	5-Wire Plug Assembly	230-234
14*	2	Gasket solenoid/end cap	113-267

Kit No. MK15-K3* (For Models 152SS5, 153SS5)

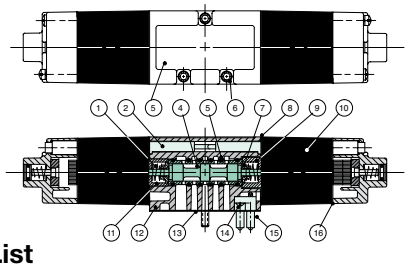

Parts List

Det. No.	No. Req'd	Part Name	Part No.
1*	2	Spring	115-204
2	2	Electrical Receptacle	125-309
3	1	Nameplate	122-941
4	1	Sleeve Assembly w/seals	209-248**
5*	6	Seals	126-202
6	3	Screw Assembly	127-294
7*	2	Spring Retainer	116-287
8*	2	Gasket solenoid/valve	113-268
9*	1	Spacer	116-288
10	2	Solenoid Capsule Assembly	See p. 21
11*	1	Spacer	116-289
12	1	Valve Body (not sold separately)	
13*	1	Gasket body/base	113-264
14	1	Screw	127-169
15	1	5-Wire Plug Assembly	230-234
16*	2	Gasket solenoid/end cap	113-267

Kit No. MK15-K3* (For Models 152SS6, 153SS6)

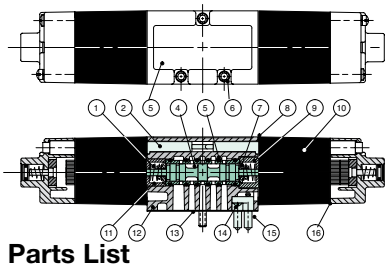

Parts List

Det. No.	No. Req'd	Part Name	Part No.
1*	2	Spring	115-204
2	2	Electrical Receptacle	125-309
3	1	Nameplate	122-941
4	1	Sleeve Assembly w/seals	209-249**
5*	6	Seals	126-202
6	3	Screw Assembly	127-294
7*	2	Spring Retainer	116-287
8*	2	Gasket solenoid/valve	113-268
9*	1	Spacer	116-288
10	2	Solenoid Capsule Assembly	See p. 21
11*	1	Spacer	116-289
12	1	Valve Body (not sold separately)	
13*	1	Gasket body/base	113-264
14	1	Screw	127-169
15	1	5-Wire Plug Assembly	230-234
16*	2	Gasket solenoid/end cap	113-267

*Indicates parts included in service kit. **Spool and sleeve assemblies are precision matched set; spools are not interchangeable; and assemblies include (6) #126-202 seals.

Information subject to change without notice. For ordering information or regarding your local sales office visit www.numatics.com.

Service Kits and Parts

Kit No. PA15-K1* (For Models JA4, JK4)

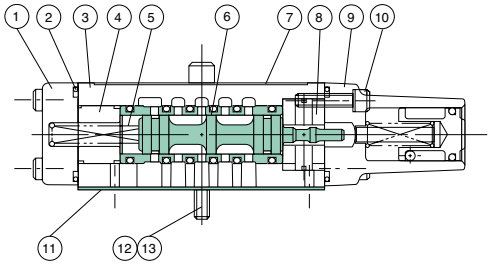

Parts List

Det. No.	No. Req'd	Part Name	Part No.
1	1	End Cap	104-233
2*	2	O-Ring	126-208
3	1	Valve Body (not sold separately)	
4*	1	Spacer	116-313
5*	1	Spring	115-224
6	1	Sleeve Assembly w/seals	209-270**
7	1	Nameplate	122-942
8*	1	Detented Body	110-113
9	1	End Cap Assembly	204-263
10	8	Screw	127-320
11*	1	Gasket	113-264
12	3	Screw	127-227
13	3	Lockwasher	128-144

Kit No. PA15-K2* (For Model JJ4)

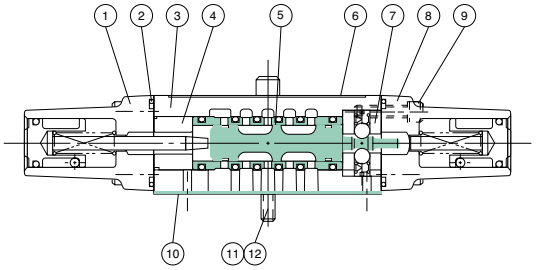

Parts List

Det. No.	No. Req'd	Part Name	Part No.
1	1	End Cap	204-265
2*	2	O-Ring	126-208
3	1	Valve Body (not sold separately)	
4*	1	Spacer	116-313
5	1	Sleeve Assembly w/seals	209-270**
6	1	Nameplate	122-942
7*	1	Detented Assembly JJ4	210-116
8	1	End Cap Assembly	204-263
9	8	Screw	127-320
10*	1	Gasket	113-264
11	3	Screw	127-227
12	3	Lockwasher	128-144

Kit No. PA15-K3* (For Model JJ5)

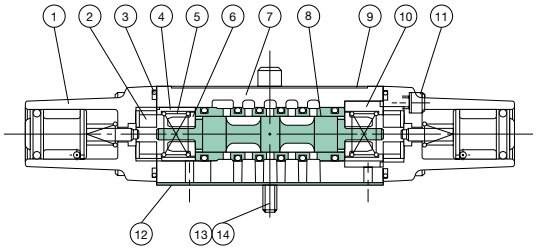

Parts List

Det. No.	No. Req'd	Part Name	Part No.
1	2	End Cap Assembly	204-267
2*	2	Bumper	114-100
3*	2	O-Ring	126-208
4*	1	Spacer	116-315
5*	2	Spring	115-225
6*	2	Spring Retainer	116-316
7	1	Valve Body (not sold separately)	
8	1	Sleeve Assembly w/seals	209-271**
9	1	Nameplate	122-942
10*	1	Spacer	116-314
11	8	Screw	127-320
12*	1	Gasket	113-264
13	3	Screw	127-227
14	3	Lockwasher	128-144

Kit No. PA15-K3* (For Model JJ6)

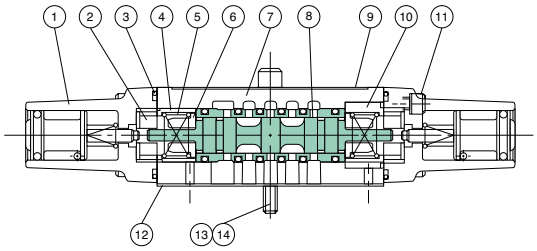

Parts List

Det. No.	No. Req'd	Part Name	Part No.
1	2	End Cap Assembly	204-267
2*	2	Bumper	114-110
3*	2	O-Ring	126-208
4*	1	Spacer	116-315
5*	2	Spring	115-225
6*	2	Spring Retainer	116-316
7	1	Valve Body (not sold separately)	
8	1	Sleeve Assembly w/seals	209-272**
9	1	Nameplate	122-942
10*	1	Spacer	116-314
11	8	Screw	127-320
12*	1	Gasket	113-264
13	3	Screw	127-227
14	3	Lockwasher	128-144

*Indicates parts included in service kit. **Spool and sleeve assemblies sold as precision matched set; spools are not interchangeable; and assemblies include (6) #126-202 seals.

Information subject to change without notice. For ordering information or regarding your local sales office visit www.numatics.com.

Mark 15 Solenoid Capsule Assemblies

Complete Solenoid Capsule Assemblies — End Cap Only

Override Type	Valve Function	Plug-In	Voltage: AC 100-115/50 110-120/60	Voltage: AC 200-230/50 220-240-60	Voltage: 24/50-60	Voltage: DC 12VDC	Voltage: DC 24VDC	Light Option: AC 100-130V	Light Option: AC 200-260V	Light Option: DC 8-13VDC	Light Option: DC 14-24VDC	Light Option: No Light
Flush Non-Locking Override w/Light	2 Position	Standard	237-325	237-326	237-426	226-800	226-801	204-217	204-218	204-491	204-492	204-216
	2 Position	DIN Plug-in	237-337	237-338	-	226-509*	226-510*	204-217	204-218	N/A	N/A	204-216
	3 Position	Standard	237-331	237-332	237-425	226-804	226-805	204-220	204-221		204-496	204-219
	3 Position	DIN Plug-in	237-343	237-344	-	226-515*	226-516*	204-220	204-221	N/A	N/A	204-219
Flush Locking w/Light	2 Position	Standard	237-361	237-362	-	-	226-902	204-226	204-227	-	-	204-224
	3 Position	Standard	237-363	237-364	-	-	236-213	204-228	204-229	-	-	204-225
Ext. Rod Locking w/Light	2 Position	Standard	237-365	237-366	237-612	-	226-906	204-238	204-239	-	-	204-236
	3 Position	Standard	237-365	237-368	-	-	226-553	204-240	204-241	-	-	204-237
Solenoid Only less end cap; screws & gaskets not included		Standard	228-690	228-691	228-692	225-371	225-372					
		DIN Plug-in	228-694	228-695	228-696	225-265	225-266					

*DIN DC solenoids are not available with light.

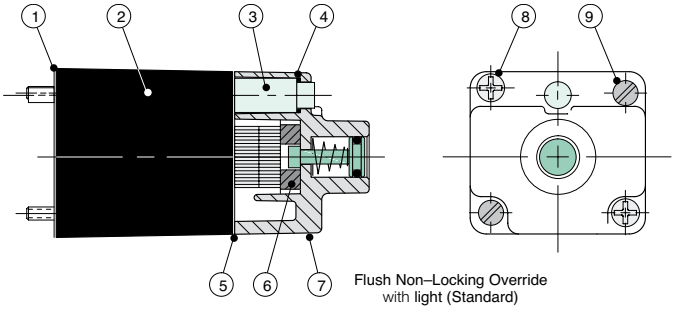

Flush Non–Locking Override with light (Standard)

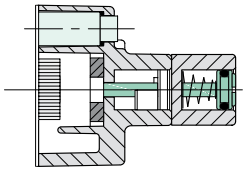

Flush Locking Override with light
(Add option "011B" to model no.)
Example: 152SA400K011B30

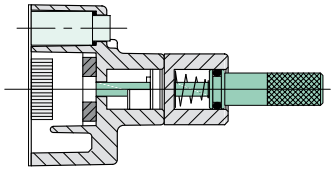

Extended Knurled Rod Locking Override with light
(Add option "011Z" to model no.)
Example: 152SA400K011Z30

Parts List

Det. No.	No. Req'd	Part Name	Part No.
1	1	Gasket solenoid/valve	113-268
2	1	Solenoid	See Chart
3	1	Light Assembly: 100-115/50 110-120/60 200-230/50 220-240/60 12VDC 24VDC	 230-235 230-235 230-236 230-236 230-283 230-284
4	1	O-Ring Seal	126-144
5	1	Gasket solenoid/end cap	113-267
6	1	Bumper: Black for 2 position Red for 3 position	 114-134 114-133
7	1	End Cap Assembly	See Chart
8	2	Screw cap/solenoid	127-297
9	2	Solenoid Screws AC Solenoid Screws DC	127-298 127-302

Plug Assemblies

Per DIN Spec. No. 43650
Accepts cable dia. .310 – .410 For DIN plug–in solenoids wiring options 6 & 4

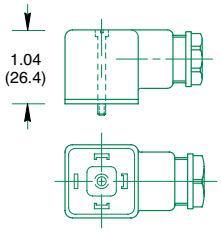

Part Name	Part No.
Gray (A) Plug Ass'y	230-369
Black (B) Plug Ass'y	230-370
Plug w/24VDC Light	230-371
Plug w/110VAC Light	230-372
Plug w/220VAC Light	230-373

Superstructure Plug with Cord

Per DIN Spec. No. 43650
For DIN plug–in solenoids wiring options 6 & 4

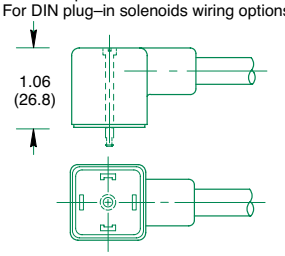

Part Name	Part No.
Plug with 4' Cord	230-213
Plug with 6' Cord	230-215

Information subject to change without notice. For ordering information or regarding your local sales office visit www.numatics.com.

numatics®

World Class Supplier of Pneumatic Components

World Headquarters

USA Numatics, Incorporated
46280 Dylan Drive
Novi, Michigan 48377

P: 248-596-3200
F: 248-596-3201

Canada Numatics, Ltd
P: 519-758-2700
F: 519-758-5540

México - Ascomatica SA de CV
P: 52 55 58 09 56 40 (DF y Area metropolitana)
P: 01 800 000 ASCO (2726) (Interior de la República)
F: 52 55 58 09 56 60

Brazil Ascoval Ind.e Comercio Ltda
P: (55) 11-4208-1700
F: (55) 11-4195-3970

LT-Mark15Series Rev 03/13
2.5M-TGI-10/09

© Numatics Inc. 2012 - 2013
Numatics® is registered in the United States and elsewhere